SIDERISE®
integrity in all we do

CW-FS | QUICK GUIDE TO INSTALLATION

VERSION 2.0 NOVEMBER 2022

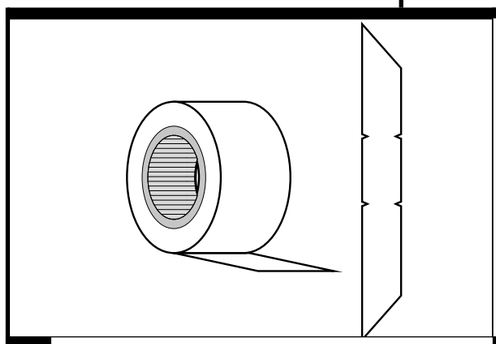

1 You need: Siderise® Fixing Brackets, Siderise® Foil Tape RFT 120/45, suitable non-combustible mechnical fixings appropriate to substrate, supplied by contractor.

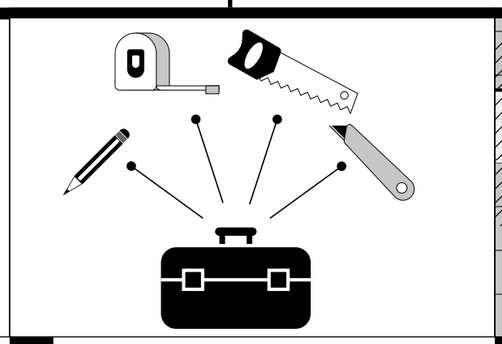

2 **Cutting on site** – tools required: marker, tape measure, knife and saw.

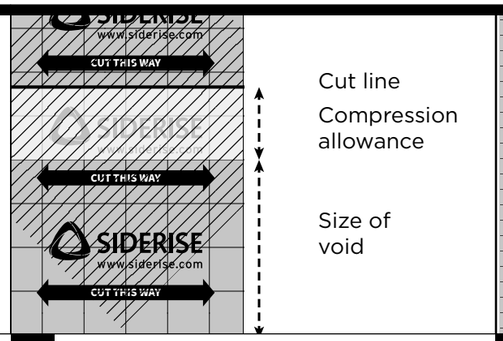

3 **Cutting on site** – Measure and mark the sheet: size of the void plus compression allowance as stated in the Certifire Certificate CF563 and product datasheet.

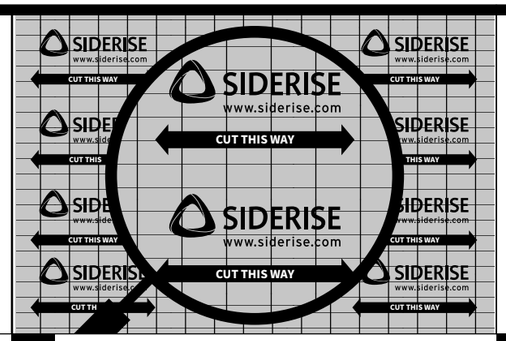

4 **Cutting on site** – Cut in the direction that is marked on the foil face of the CW-FS sheet.

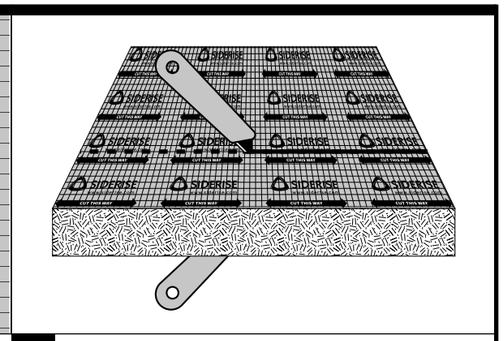

5 **Cutting on site** – Use a sharp knife to cut through the foil facings on both sides.

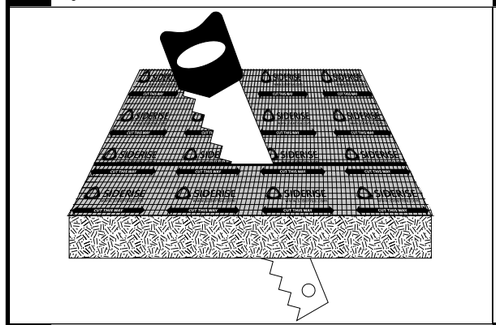

6 **Cutting on site** – Cut the stone wool with a saw, being careful not to rip the foil facing.

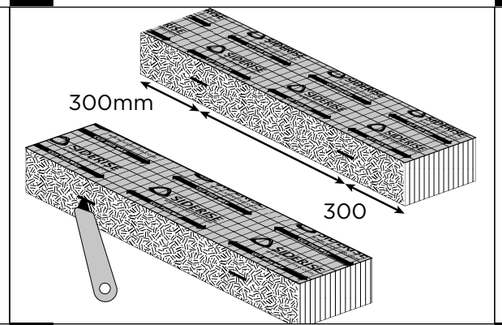

7 **Inserting Brackets** – Impale fixing bracket mid thickness into CW-FS strip. A sharp knife can be inserted first to make it easier. Fixing brackets are impaled at nominal 600mm fixing centres, i.e. 300mm from each end.

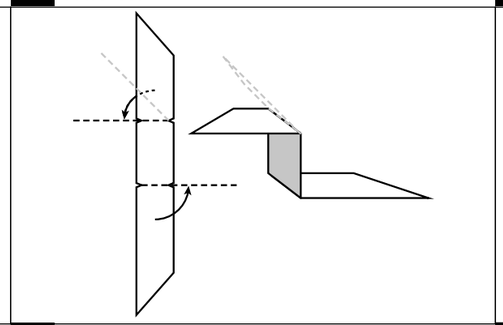

8 **Inserting Brackets** – Using personal protection equipment (e.g. gloves) fold the bracket as shown.

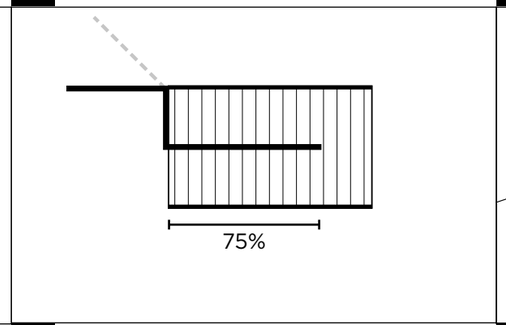

9 **Inserting Brackets** – Penetration of bracket is 75% of the width of the cut strip (e.g. if the cut strip is 100mm wide, bracket penetration is 75mm).

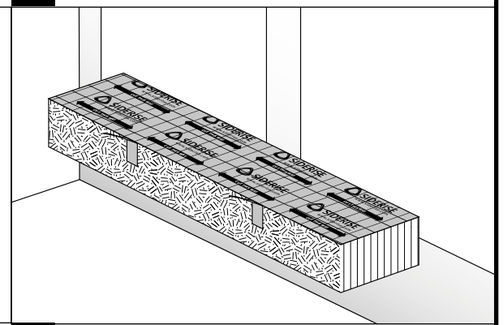

10 **Installing Barrier** – Take the CW-FS unit and apply manual compression to install it into the cavity.

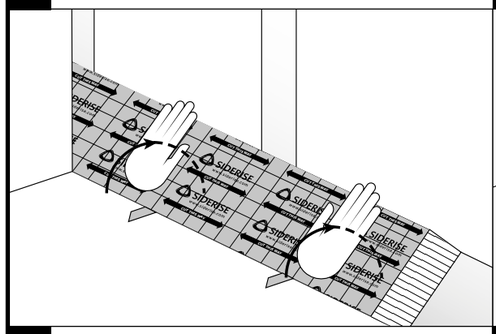

11 **Installing Barrier**– Take the CW-FS unit and apply manual compression to install it into the cavity.

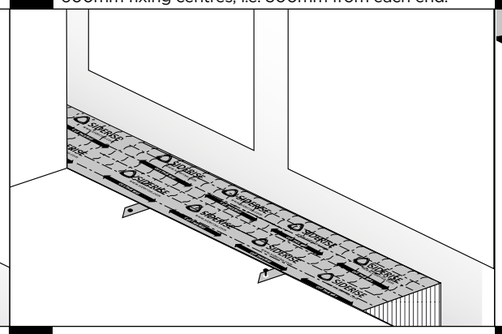

12 **Installing Barrier** – Secure non-combustible fixings in accordance with manufacturer's instructions, noting edge distance requirements.

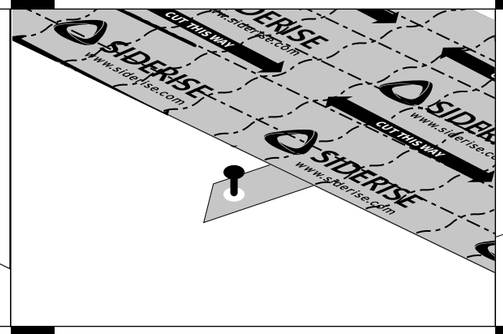

13 **Installing Barrier** – Secure non-combustible fixings in accordance with manufacturer's instructions, noting edge distance requirements.

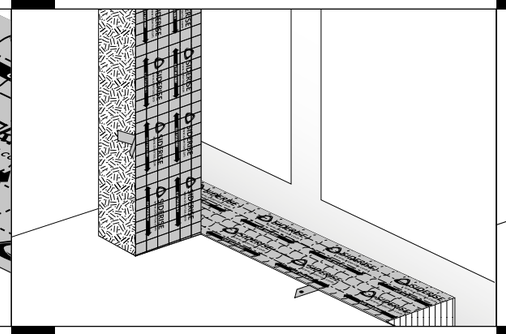

14 **Installing Barrier** – When cut strips are inserted into the cavity, the fixing brackets are simply located over the support structure.

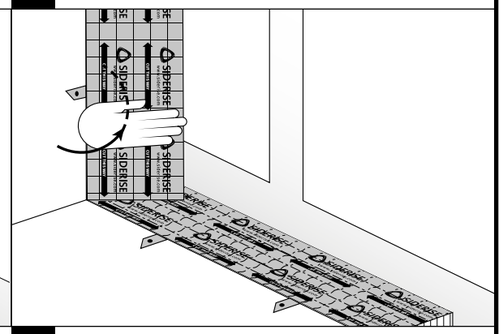

15 **Installing Barrier** – Apply manual pressure.

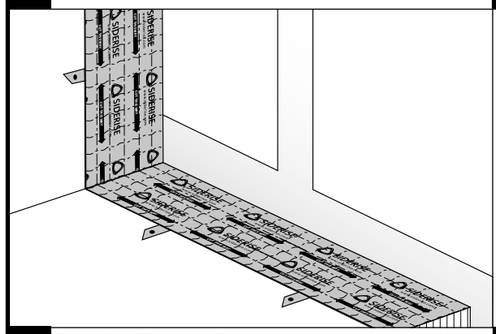

16 **Installing Barrier** – Secure non-combustible fixings in accordance with manufacturer's instructions, noting edge distance requirements.

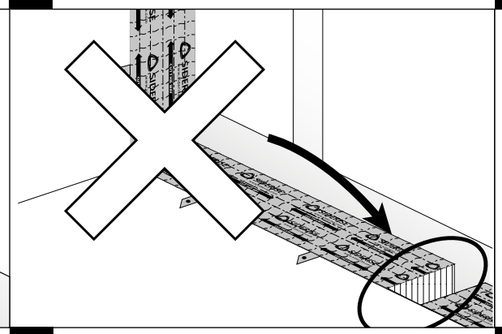

17 Install tightly abutted ensuring that there are no gaps between CW-FS strip sections.

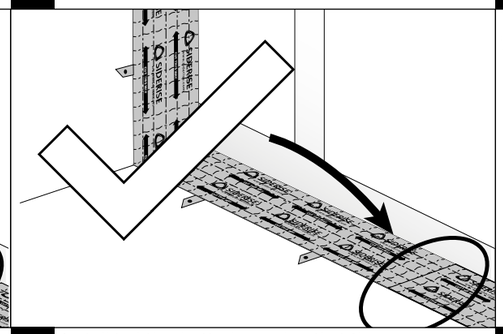

18 Install tightly abutted ensuring that there are no gaps between CW-FS strip sections

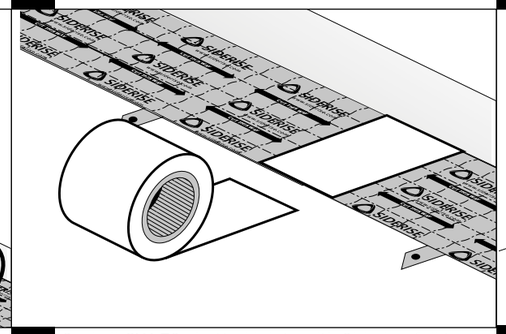

19 Seal all CW-FS abutted joints with Siderise® foil tape RFT 120/45.

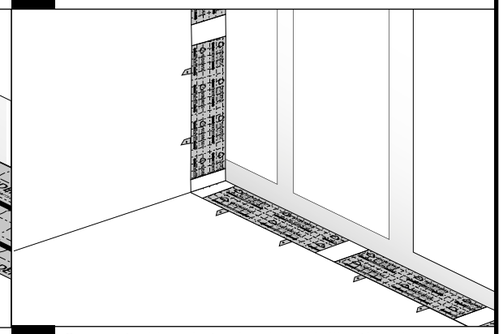

20 Completed brackets should look like the diagram above.

This is a generic guide and not project specific. You may have interfaces between Siderise cavity fire barriers and façade system components which require independent detailing, therefore please contact Siderise to arrange on-site training.
We reserve the right to amend installation recommendations without notice. Siderise Group Forge Industrial Estate Maesteg Bridgend CF34 0AH UK. **T**: +44 (0)1656 730833 | **F**: +44 (0) 1656 812509 | **E**: technical@siderise.com **www.siderise.com**